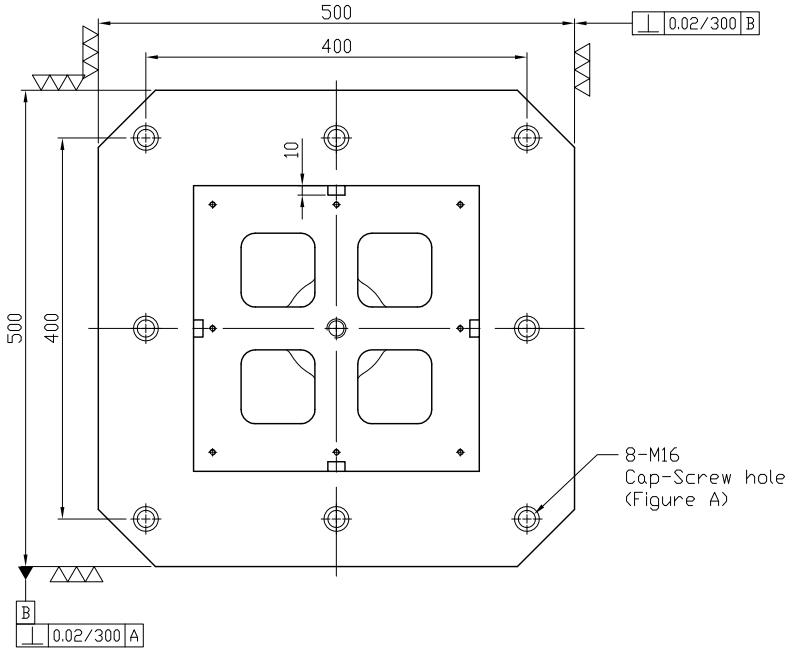

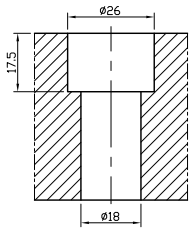

Figure A

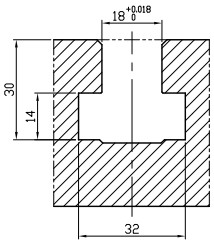

Figure D

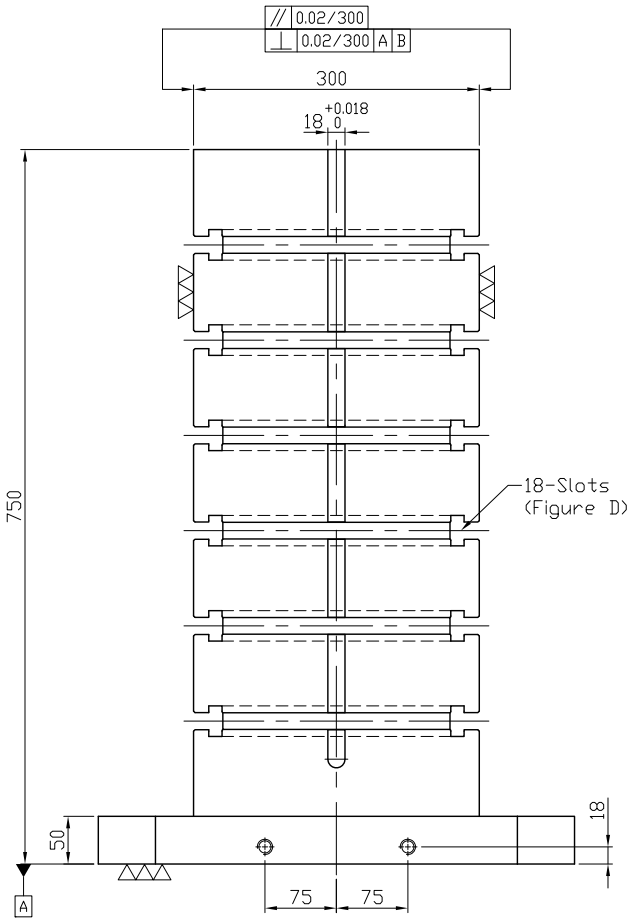

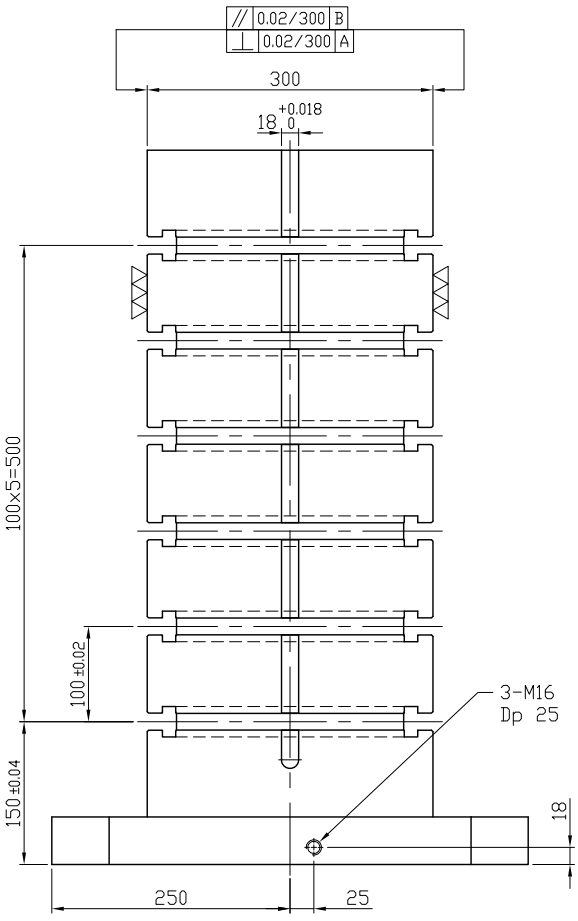

*Edge chamfered C2

NW:290KG

Material	Heat treatment	Surface treatment				
FC300	Annealing Process					
Drafted by	Checked by	Approved by		Scale	Date	Sheet	Edition
S.C.H				1/1	2011.10.19	1/1	A

LEAVE INDUSTRIAL CO., LTD.

TITLE: SQUARE TOOLING COLUMN

DWG.NO. BP09-500500-0750-18