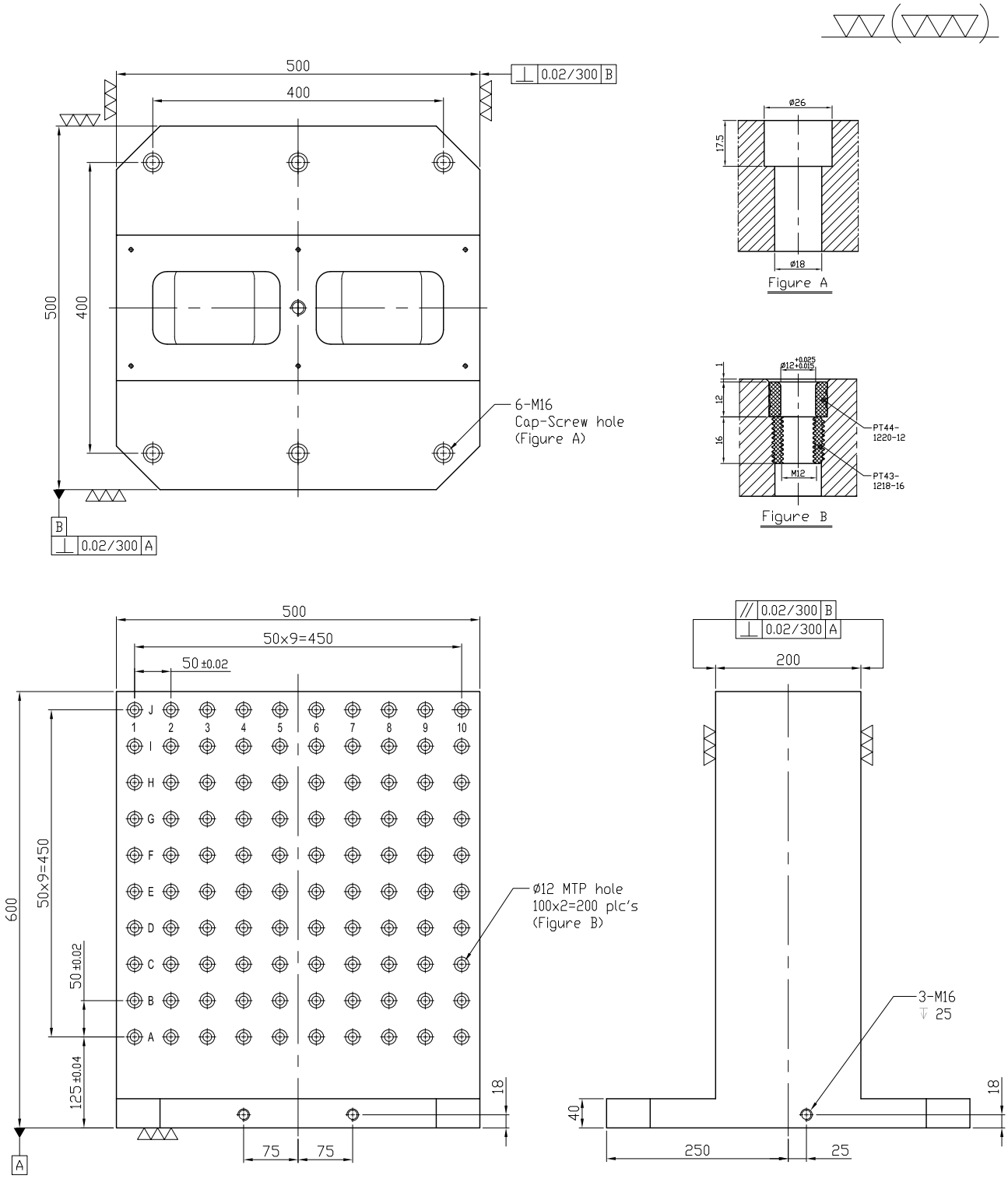

BPA11-500500-0600-12