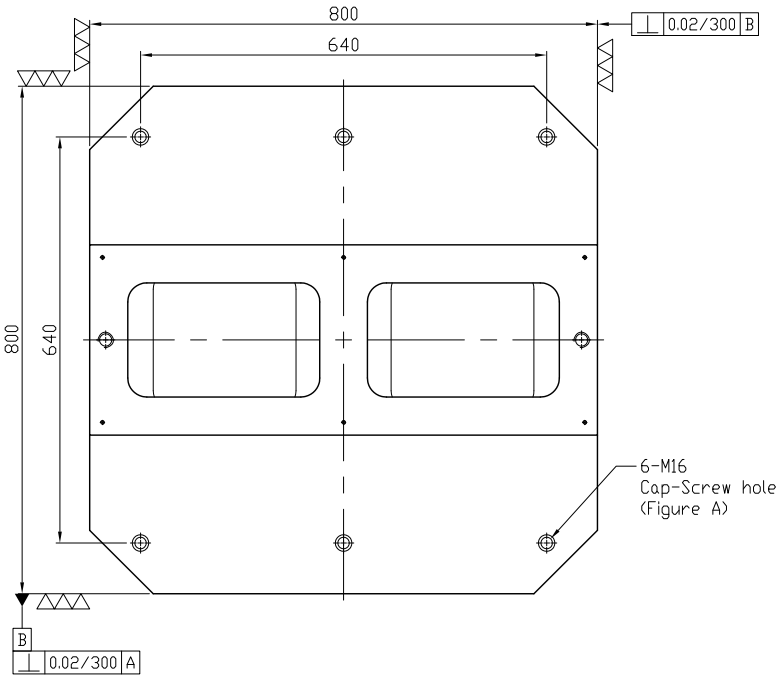

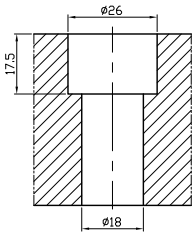

Figure A

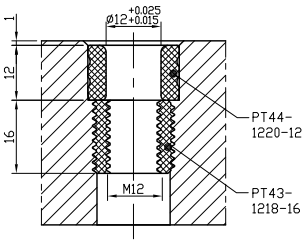

Figure B

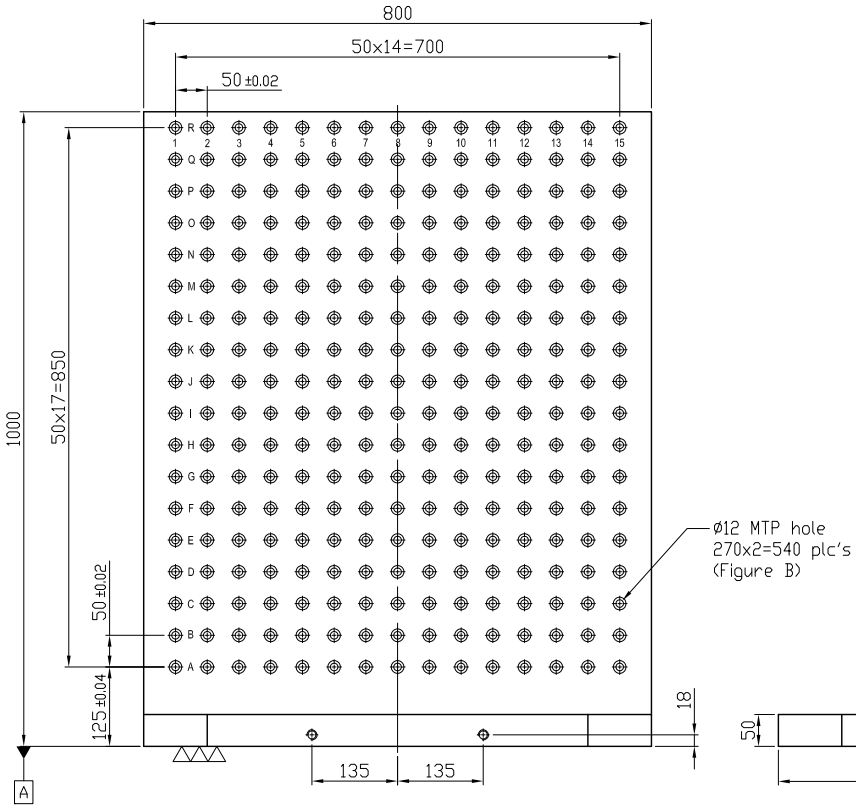

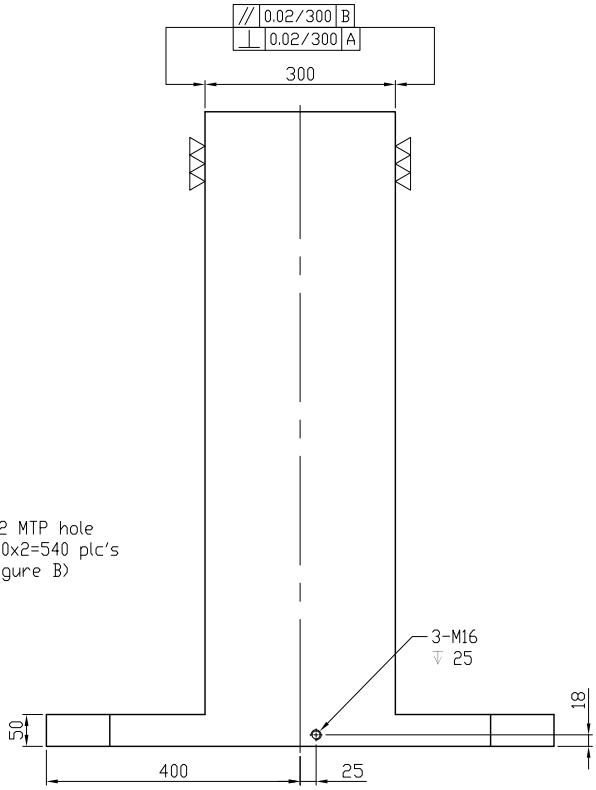

BPA11-800800-1000-12