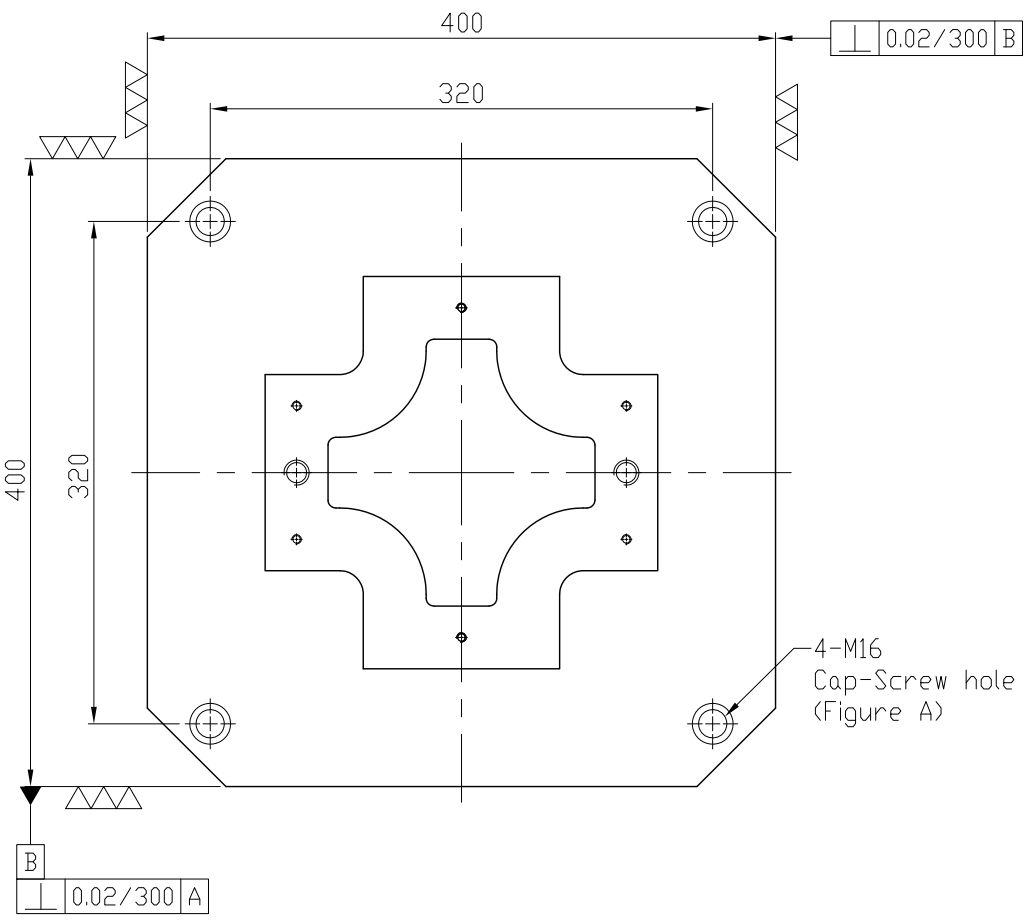

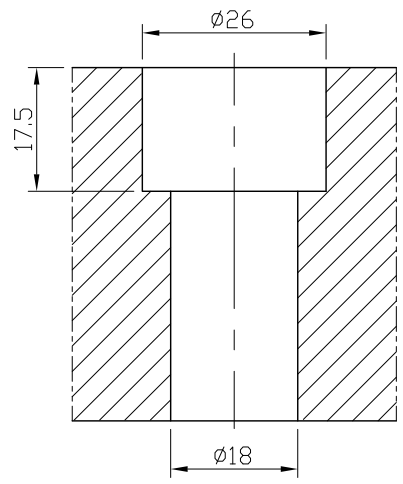

Figure A

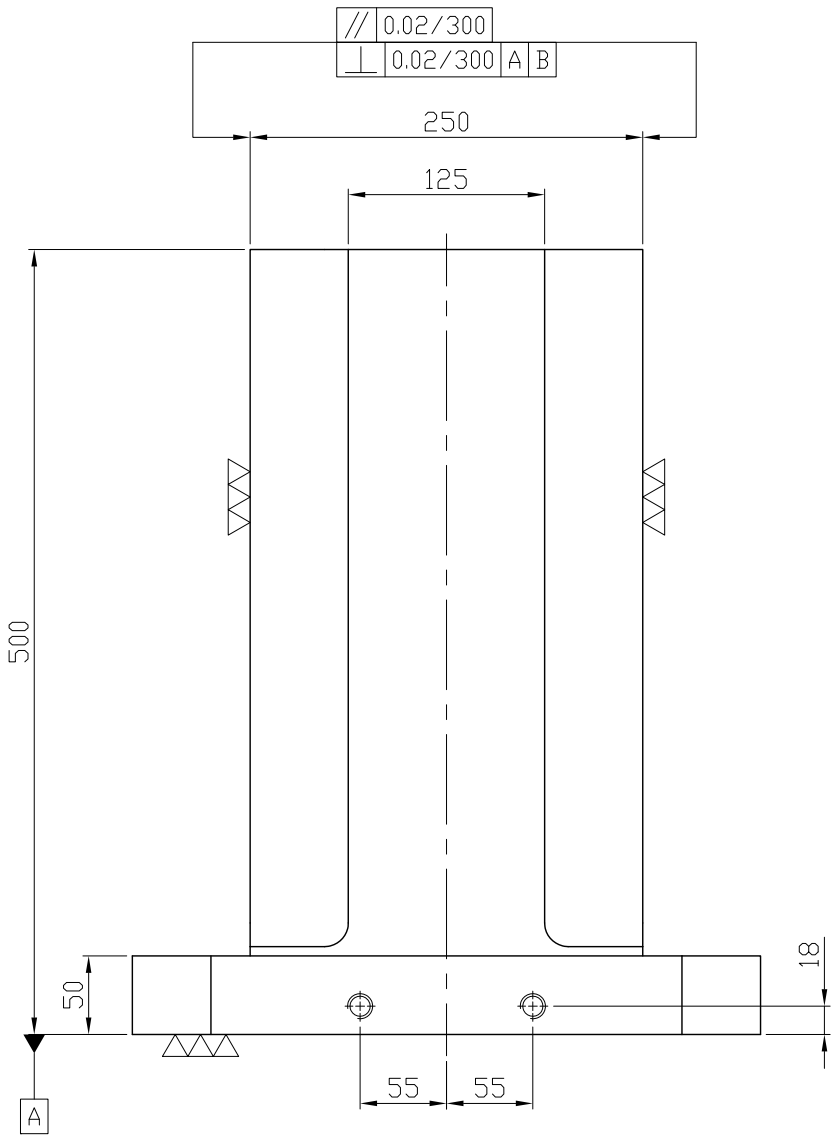

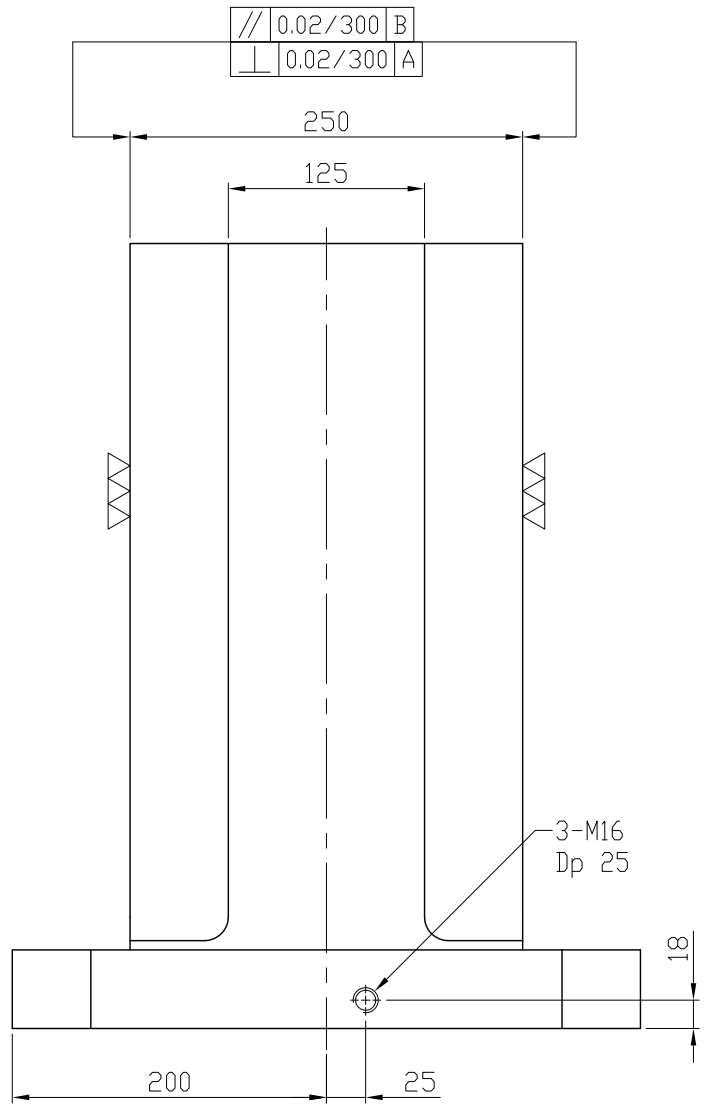

*Edge chamfered C2

NW:154KG

Material	Heat treatment	Surface treatment
FC300	Annealing Process	

Drafted by	Checked by	Approved by	Scale	Date	Sheet	Edition
S.C.H			1/1	2011.12.21	1/1	A

LEAVE INDUSTRIAL CO., LTD.

TITLE: CROSS TOOLING COLUMN

DWG.NO. BP29-400400-0500