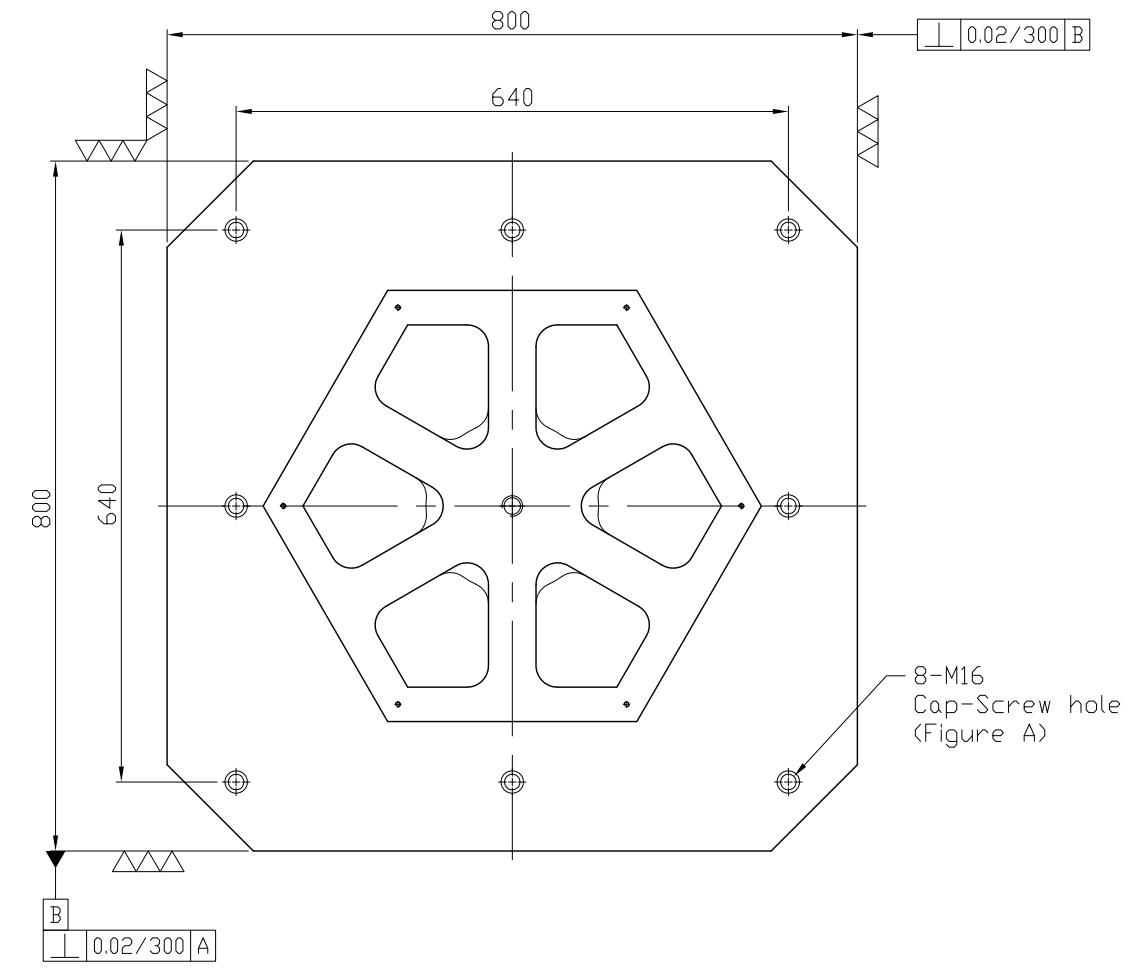

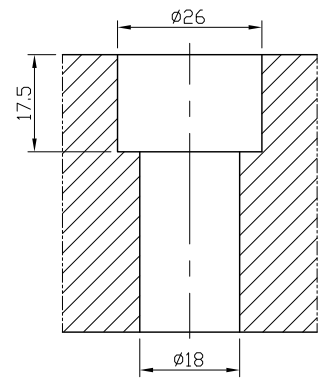

Figure A

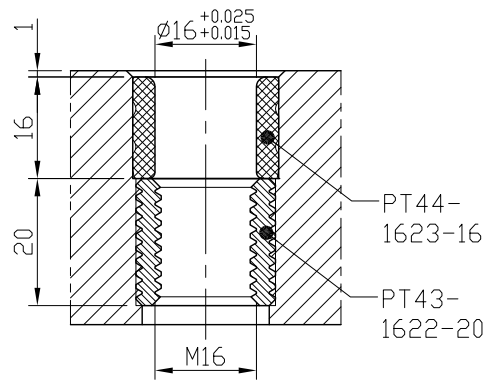

Figure B

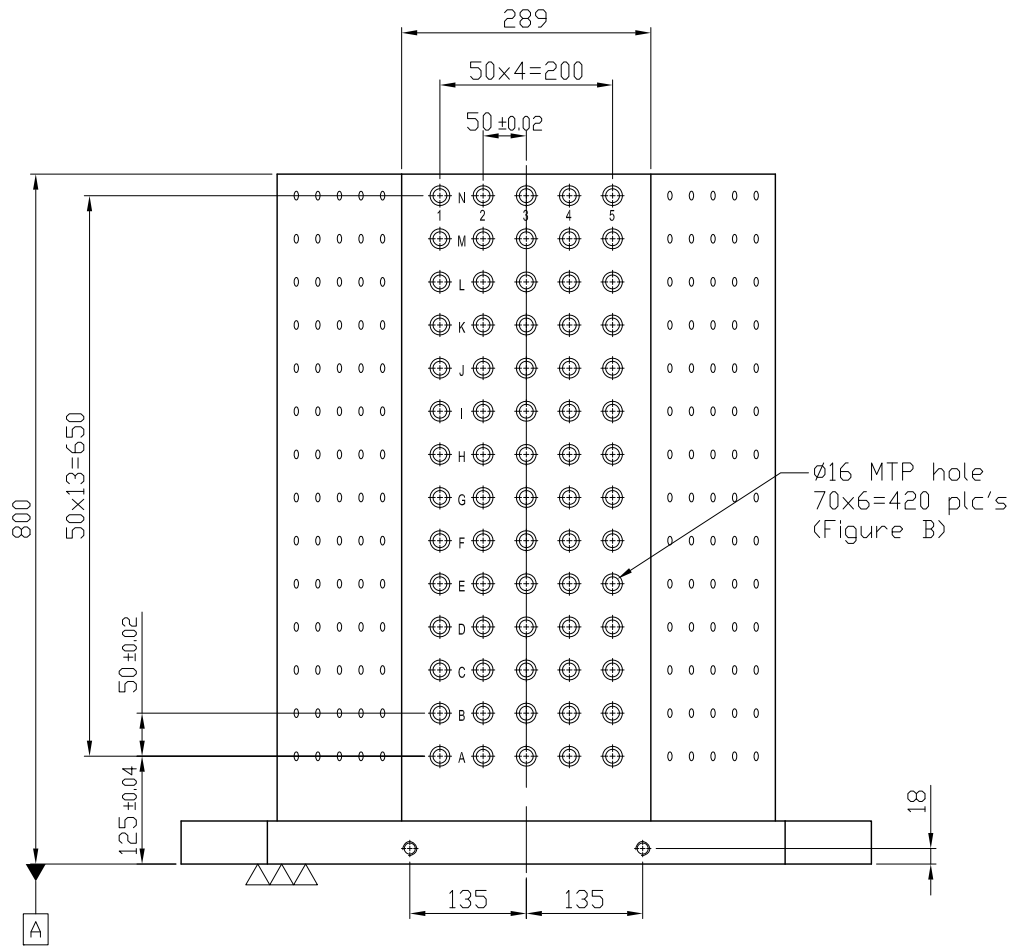

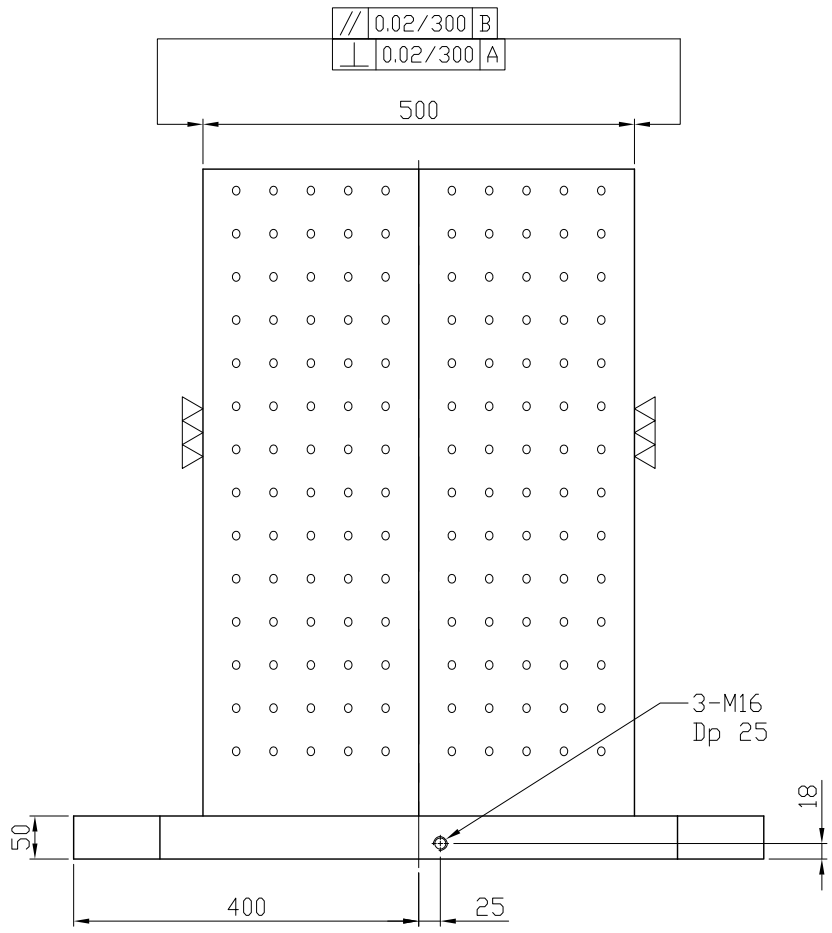

*Edge chamfered C2

NW:600KG

Material	Heat treatment	Surface treatment
FC300	Annealing Process	

Drafted by	Checked by	Approved by	Scale	Date	Sheet	Edition
S.C.H			1/1	2012.02.03	1/1	A

LEAVE INDUSTRIAL CO., LTD.

TITLE: HEXAGONAL CUBE

DWG.NO. BP32-800800-0800-16