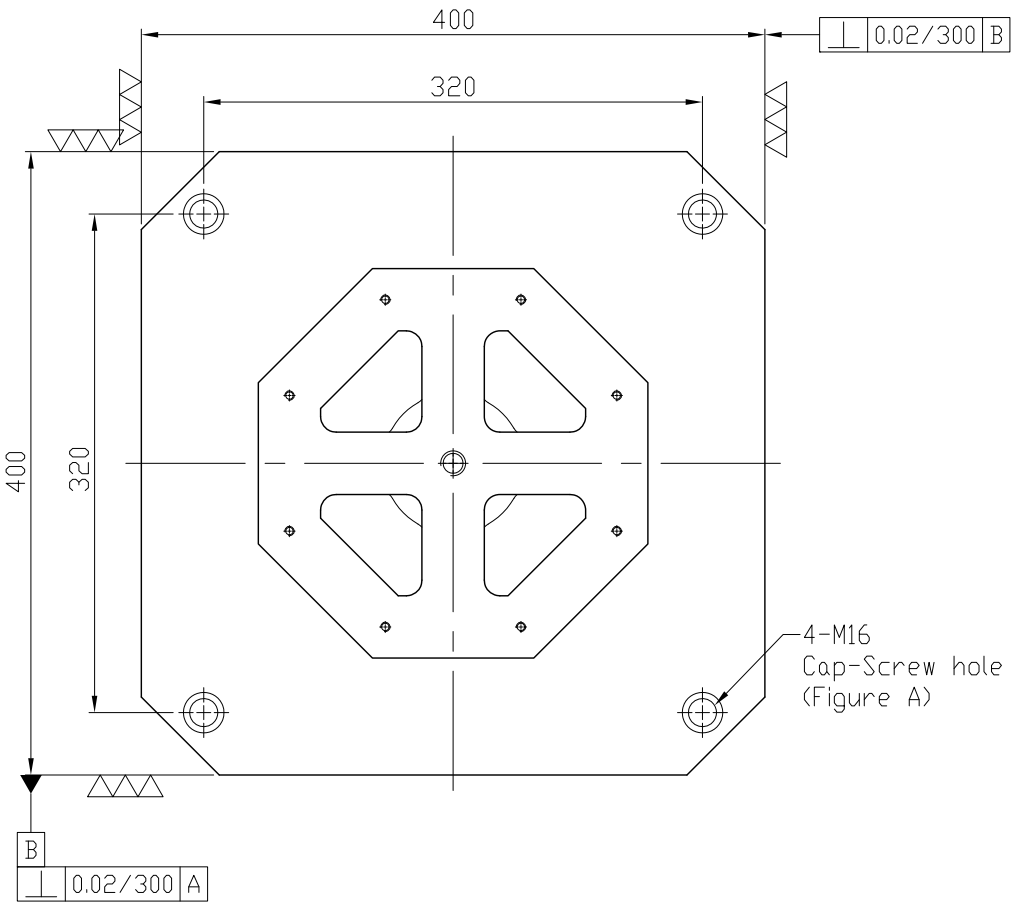

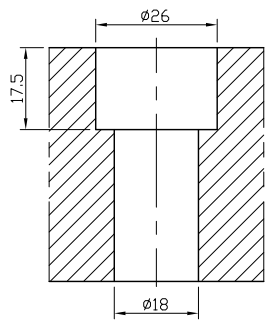

Figure A

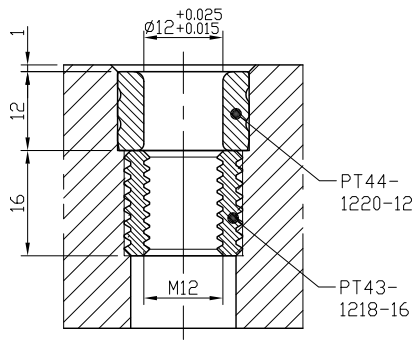

Figure B

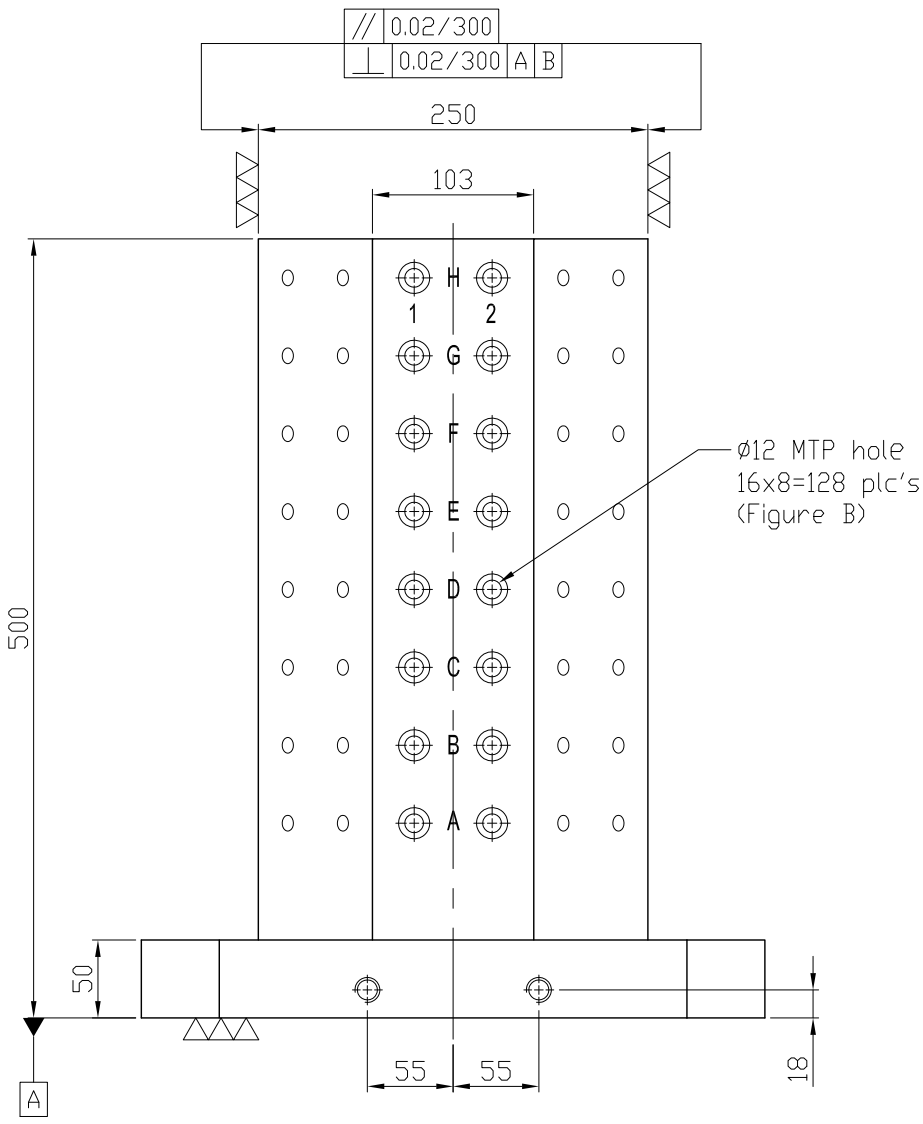

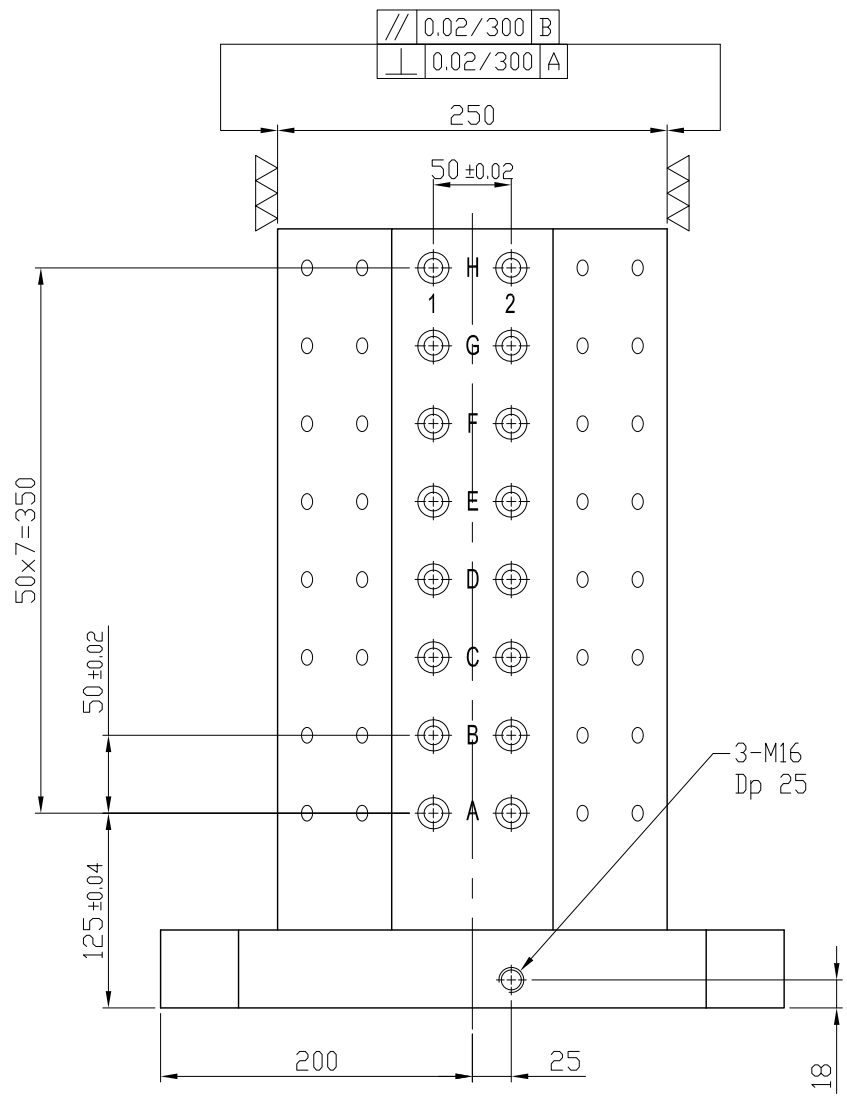

*Edge chamfered C2

NW:145KG

Material	Heat treatment	Surface treatment
FC300	Annealing Process	

Drafted by	Checked by	Approved by		Scale	Date	Sheet	Edition
S.C.H				1/1	2012.02.03	1/1	A

LEAVE INDUSTRIAL CO., LTD.

TITLE: M/C OCTAGONAL CUBE

DWG.NO. BP34-400400-0500-12