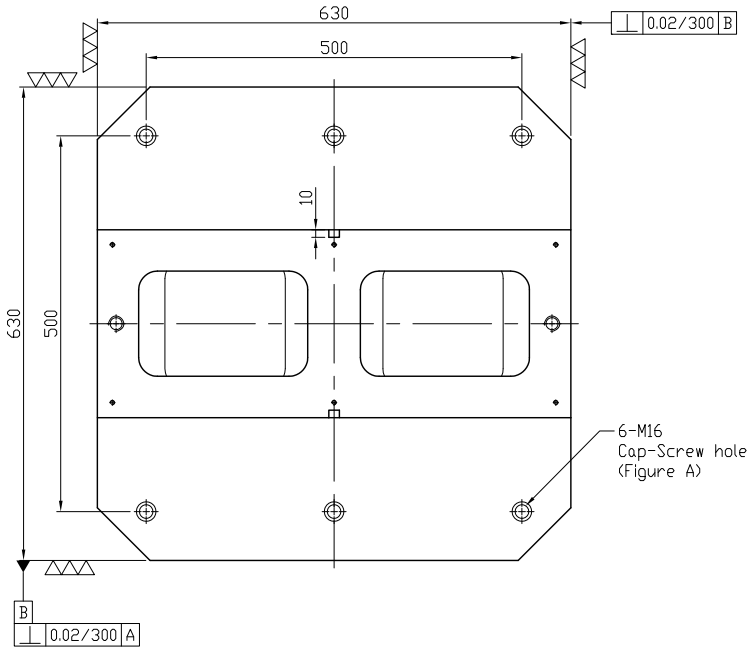

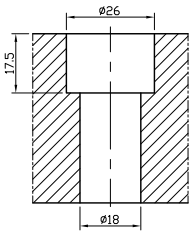

Figure A

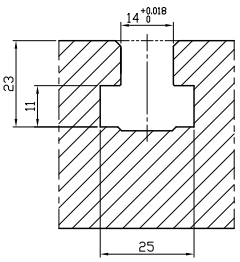

Figure D

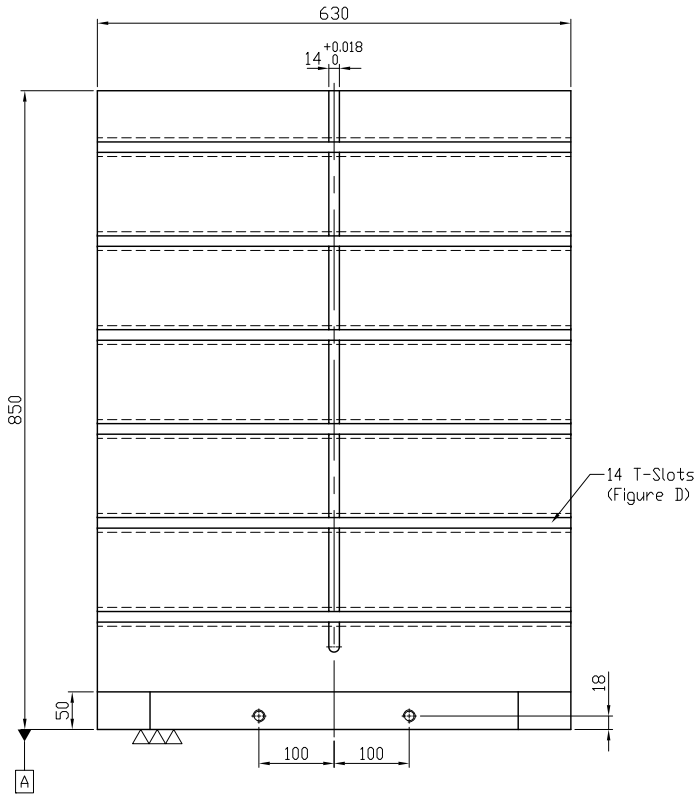

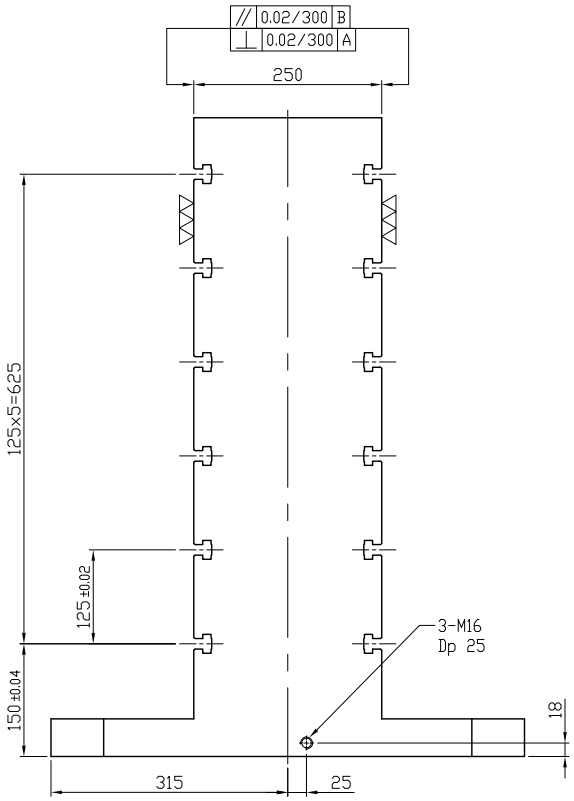

*Edge chamfered C2

NW:515KG

Material	Heat treatment	Surface treatment
FC300	Annealing Process	

Drafted by	Checked by	Approved by	Scale	Date	Sheet	Edition
S.C.H			1/1	2011.10.19	1/1	A

LEAVE INDUSTRIAL CO., LTD.

TITLE: DOUBLE SIDED TOOLING COLUMN

DWG.NO. BP12-630630-0850-14